# Balancing and Settlement Code

## Code of Practice Five

## CODE OF PRACTICE FOR THE METERING OF ENERGY TRANSFERS WITH A MAXIMUM DEMAND OF UP TO (AND INCLUDING) 1MW FOR SETTLEMENT PURPOSES

**Issue 7**

**~~Version 18.0~~Version 18.2**

**DATE: ~~17 November 2022~~[XXXX]**


© Elexon Limited 2022

# Code of Practice Five

## CODE OF PRACTICE FOR THE METERING OF ENERGY TRANSFERS WITH A MAXIMUM DEMAND OF UP TO (AND INCLUDING) 1MW FOR SETTLEMENT PURPOSES

1. Reference is made to the Balancing and Settlement Code for the Electricity Industry in Great Britain, and, in particular, to the definition of "Code of Practice" in Annex X.1 thereof.

2. This is Code of Practice Five, Issue 7, Version ~~18.0.~~18.2

3. This Code of Practice shall apply to Metering Systems comprising Metering Equipment that is subject to the requirements of Section L of the Balancing and Settlement Code.

4. This Code of Practice is effective from ~~17 November 2022.~~[XXXX]

5. This Code of Practice has been approved by the Panel.

**Intellectual Property Rights, Copyright and Disclaimer**

The copyright and other intellectual property rights in this document are vested in Elexon or appear with the consent of the copyright owner. These materials are made available for you for the purposes of your participation in the electricity industry. If you have an interest in the electricity industry, you may view, download, copy, distribute, modify, transmit, publish, sell or create derivative works (in whatever format) from this document or in other cases use for personal academic or other non-commercial purposes. All copyright and other proprietary notices contained in the document must be retained on any copy you make.

All other rights of the copyright owner not expressly dealt with above are reserved.

No representation, warranty or guarantee is made that the information in this document is accurate or complete. While care is taken in the collection and provision of this information, Elexon Limited shall not be liable for any errors, omissions, misstatements or mistakes in any information or damages resulting from the use of this information or action taken in reliance on it.

# AMENDMENT RECORD

| ISSUE | DATE | VERSION | CHANGES | AUTHOR | APPROVED |
|---|---|---|---|---|---|
| 1 | 4/12/92 | 1.00 | Approved by Suppliers in General Meeting | CoP5 WG | |
| 2 | 12/8/94 | 1.03 | Revisions following comments from MSC | MSC-WG | At MSC 1/9/94 |
| 3 | 20/3/96 | 1.04 | Revision for NPG | NPG-WG | MDC 63 |
| 4 | 26/10/96 | 1.06 | Editorial Changes | MDC-WG | MDC 71 |
| | 31/12/96 | 1.07 | Revisions for 1998 Market | C.A. | |
| | 10/3/97 | 1.08 | Revisions following legal advice | C.A. | |
| | 8/4/97 | 1.09 | Revisions following comments from SDG and the SSA | C.A. | |
| | 16/5/97 | 1.10 | Revisions for MIST trading | MSC-WG | |
| | 19/8/97 | 1.11 | Revisions for market post 01/04/98 | C.A. | |
| | 1/9/97 | 1.12 | Amended following review by Expert Group and internally. | (C A Team) | |
| | 26/9/97 | 1.13 | Revisions following CoPSRP review | VG | |
| | 25/3/98 | 1.14 | Draft for MDC | CoPSRP | |
| | 20/4/98 | 1.15 | Post MDC revisions and CoPSRP on 17/4/98 | CoPSRP | |
| 5 | 1998 Operational Date | 1.12 | Amended following review by Expert Group and internally. | 1998 Programme (CA Team) | |
| 6 | 01/09/98 | 2.00 | Harmonisation of Codes of Practice | COPSRP | Approved at MDC88 4/6/98 |
| 6 | Code Effective Date[1] | 2.00 | Re-badging of Code of Practice Five for the implementation of the Balancing and Settlement Code | BSCCo (Elexon Limited) | Panel 16/11/00 (Paper 07/003) |
| 6 | BETTA Effective Date | 3.0 | BETTA 6.3 and CP 794 for the SVA February 2005 Release | BSCCo | SVG/48/004 |
| 6 | 03/11/05 | 4.0 | CP1100 for the SVA November 05 Release | BSCCo | SVG/56/004 |
| 6 | 28/02/08 | 5.0 | CP1166 for the February 08 Release | BSCCo | SVG79/11 |
| 6 | 06/11/08 | 6.0 | CP1238 for the November 08 Release | BSCCo | ISG88/01 SVG88/02 |

[1] "Code Effective Date" means the date of the Framework Agreement.


**© Elexon Limited 2022**

| ISSUE | DATE | VERSION | CHANGES | AUTHOR | APPROVED |
|---|---|---|---|---|---|
| 6 | 25/06/09 | 7.0 | CP1264 for the June 09 Release | BSCCo | ISG94/01<br>SVG94/02 |
| 6 | 20/11/09 | 8.0 | P238 Modification | BSCCo | Panel 160/05 |
| 6 | 26/11/09 | 9.0 | P230 Modification | BSCCo | Panel |
| 6 | 25/02/10 | 10.0 | CP1296 | BSCCo | ISG102/01<br>SVG102/01 |
| 6 | 23/02/12 | 11.0 | CP1349<br>P266 | BSCCo<br>BSCCo | SVG127/05<br>SVG130/01 |
| 6 | 26/02/15 | 12.0 | CP1422 – February 2015 Release | BSCCo | ISG163/01<br>SVG166/06 |
| 6 | 23/02/17 | 13.0 | CP1470 – February 2017 Release | BSCCo | ISG185/02<br>SVG188/04 |
| 6 | 02/11/17 | 14.0 | CP1479 – November 2017 Release<br>CP1485– November 2017 Release | BSCCo<br>BSCCo | Panel 264/11<br>SVG196/06 |
| 6 | 27/06/19 | 15.0 | CP1508 – June 2019 Release | BSCCo | SVG213/04<br>ISG210/02 |
| 6 | 01/09/21 | 16.0 | P420 - September 2021 Non-Standard Release | BSCCo | P316/05 |
| 7 | 30/06/2022 | 17.0 | CP1527, CP1553, CP1554 – June 2022 Standard Release | BSCCo | ISG249/05<br>SVG25104,<br>SVG233/02,<br>ISG231/01,<br>ISG249/09<br>SVG251/09 |
| 7 | 17/11/2022 | 18.0 | P437 – 17 November 2022 Special Release | BSCCo | Panel 331/04 |
| 7 | [XXXX] | 18.2 | Market-wide Half Hourly Programme | | |


**© Elexon Limited 2022**

# CODE OF PRACTICE FOR THE METERING OF ENERGY TRANSFERS WITH A MAXIMUM DEMAND OF UP TO (AND INCLUDING) 1MW FOR SETTLEMENT PURPOSES


**1. SCOPE 7**

**2. REFERENCES 8**

**3. DEFINITIONS AND INTERPRETATIONS 9**

3.1 Active Energy * 9
3.2 Active Power * 9
3.3 Actual Metering Point ‡ 9
3.4 Apparent Energy ‡ 9
3.5 Apparent Power ‡ 9
3.6 CTN ‡ 9
3.7 CVA Customer † 9
3.8 De-Energised ‡ 10
3.9 Defined Metering Point ‡ 10
3.10 Demand Period ‡ 10
3.11 Demand Values ‡ 10
3.12 Electricity * 10
3.13 Export † 10
3.14 Import † 10
3.15 Interrogation Unit ‡ 10
3.16 Maximum Demand † 10
3.17 Meter * 11
3.18 Metering Equipment * 11
3.19 Meter Register ‡ 11
3.20 Offshore Platform 11
3.21 Offshore Power Park Module 11
3.22 Outstation * 11
3.23 Outstation System ‡ 11
3.24 Password ‡ 11
3.25 PSTN ‡ 11
3.26 Rated Measuring Current ‡ 12
3.27 Reactive Energy * 12
3.28 Reactive Power * 12
3.29 Registrant * 12
3.30 Settlement Instation ‡ 12
3.31 SVA Customer † 12
3.32 UTC * 12

**4. MEASUREMENT CRITERIA 13**

4.1 Measured Quantities and Demand Values for Metering Systems Registered in CMRS 13
*4.1.1 Measured Quantities 13*
*4.1.2 Demand Values 13*
4.2 Measured Quantities and Demand Values for Metering Systems Registered in SMRS 14
*4.2.1 Measured Quantities 14*
*4.2.2 Demand Values 14*
4.3 Accuracy Requirements 15
*4.3.1 Overall Accuracy 15*



**© Elexon Limited 2022**

*4.3.2 Compensation for Measurement Transformer Error* *16*

*4.3.3 Compensation for Power Transformer and Line Losses* *16*

**5. METERING EQUIPMENT CRITERIA** **16**

5.1 Measurement Transformers 17

*5.1.1 Current Transformers* *17*

*5.1.2 Voltage Transformers* *18*

*5.1.3 Measurement Transformers Installed on Existing Circuits* *18*

5.2 Fusing and Testing Facilities 19

5.3 Meters 19

5.4 Displays and Facilities for Registrant or Supplier Information 20

*5.4.1 Displays* *20*

*5.4.2 Facilities* *21*

5.5 Outstation 21

*5.5.1 Data Storage* *22*

*5.5.2 Time Keeping* *23*

*5.5.3 Monitoring Facilities* *23*

5.6 Communications 24

*5.6.1 Local Interrogation* *25*

*5.6.2 Remote Interrogation* *25*

5.7 Appropriate Seals 26

**6. ASSOCIATED FACILITIES** **26**

6.1 Interrogation Unit 26

6.2 Additional Features 26

**7. ACCESS TO DATA** **27**

**APPENDIX A DEFINED METERING POINTS** **28**

**APPENDIX B LABELLING OF METERS FOR IMPORT AND EXPORT** **30**

**APPENDIX C TYPICAL TESTING FACILITIES AND FUSING ARRANGEMENTS 33**

**APPENDIX D PASSWORDS** **34**

**APPENDIX E OPTIONS FOR ENSURING METERS AND DISPLAYS CAN BE READ AND REMOTELY INTERROGATED** **35**


**© Elexon Limited 2022**

## FOREWORD

This Code of Practice defines the minimum requirements for the Metering Equipment required for the measurement and recording of electricity transfers at Defined Metering Points where the Maximum Demand does not exceed 1MW.

The BSCCo shall retain copies of, inter alia, the Code of Practice together with copies of all documents referred to in them, in accordance with the provisions of the Balancing and Settlement Code (the Code).

## 1. SCOPE

This Code of Practice states the practices that shall be employed, and the facilities that shall be provided for the measurement and recording of the quantities required for Settlement purposes.

This Code of Practice specifically applies to the Metering Equipment to be installed on each circuit where the Maximum Demand of the electricity being transferred does not exceed 1MW.

This Code of Practice applies equally to "whole current" metering and metering supplied via measurement transformers operating at high or low voltages.

It derives force from the Code, and in particular the metering provisions (Section L, to which reference should be made. It should also be read in conjunction with the relevant BSC Procedures.

Metering Equipment that meets the requirements of this Code of Practice is also applicable where the Registrant is required by its Supply Licence (and as referenced in Section L 3.2.6) to install Metering Equipment that is capable of providing measured electricity consumption data for multiple periods (at least half hourly) and providing the Registrant with remote access to such data.

Outstations shall, as a minimum, be capable of interrogation by the Settlement instation. In addition, Outstations may deliver metering data to the Settlement instation providing that the requirements of this Code of Practice are met.

This Code of Practice does not contain the calibration, testing and commissioning requirements for Metering Equipment used for Settlement purposes. These requirements are detailed in Code of Practice Four - "Code of Practice for Calibration, Testing and Commissioning Requirements for Metering Equipment for Settlement Purposes".

Dispensations from the requirements of this Code of Practice may be sought in accordance with the Code and BSCP32.

Meters and Outstations referred to in this Code of Practice shall only achieve successful compliance in respect of any testing detailed in this Code of Practice if the requirements set out in accordance with BSCP601 are also observed and successfully completed or a valid Metering Dispensation has been granted covering any departure from the requirements as detailed in this Code of Practice.


**© Elexon Limited 2022**

Generic Metering Dispensations applicable to this Code of Practice are located on the BSC Website.

In the event of an inconsistency between the provisions of this Code of Practice and the Code, the provisions of the Code shall prevail.

## 2. REFERENCES

The following documents are referred to in the text[2], except in relation to measurement transformers where one of the conditions, set out in Section 5.1, is met:-

| | |
|---|---|
| BS EN 50470 – 3 | Electricity metering equipment (a.c.) - Part 3: Particular requirements – Static meters for active energy (class indexes A, B and C) |
| BS EN/IEC 62053-21 | AC Static Watthour Meters for Active Energy (Classes 1 and 2) |
| BS EN/IEC 62053-11 | Class 0.5, 1 and 2 Alternating Current Watt-Hour Meters. |
| BS 7856 | Code of Practice for Design of Alternating Current Watt-Hour Meters for Active Energy (Classes 1 & 2) |
| BS EN/IEC 62053-23 | Alternating Current Static Var-Hour Meters for Reactive Energy (Classes 2 and 3). |
| BS EN/IEC 61869-4 | Instrument Transformers - Combined Transformers |
| BS EN/IEC 61869-2 | Current Transformers |
| BS EN/IEC 61869-3 | Voltage Transformers |
| BS EN/IEC 62056-21 | Data Exchange for Meter Reading, Tariff and Load Control. Direct Local Exchange. |
| Balancing and Settlement Code | Section X; Annex X-1 and Section L and BSC Procedures |
| Code of Practice Four | Code of Practice for Calibration, Testing and Commissioning Requirements for Metering Equipment for Settlement Purposes |
| BSC Procedures | See BSC Procedures Index |
| Electricity Act 1989 | Schedule 7, as amended by Schedule 1, to the Competition and Services (Utilities) Act 1992. |
| Meter Operation Code of Practice Agreement | Agreement between Meter Operators and Distribution Businesses governing arrangements for safety and technical competence in accordance with the Retail Energy Code |
| Standard Frequency and Time Signal Emission | International Telecommunication Union - RTF.460 (ISBN92-61-05311-4) |

[2] Metering Equipment should be tested and stamped to the latest iteration of the applicable standard named in this document at the time of initial registration.


**© Elexon Limited 2022**

## 3. DEFINITIONS AND INTERPRETATIONS

Save as otherwise expressly provided herein, words and expressions used in this Code of Practice shall have the meanings attributed to them in the Code and are included for the purpose of clarification.

Note: * indicates definitions in the Code.

Note: † indicates definitions which supplement or complement those in the Code.

Note: ‡ indicates definitions specific to this Code of Practice.

### 3.1 Active Energy *

Active Energy means the electrical energy produced, flowing or supplied by an electric circuit during a time interval, being the integral with respect to time of the instantaneous Active Power, measured in units of watt-hours or standard multiples thereof.

### 3.2 Active Power *

Active Power means the product of voltage and the in-phase component of alternating current measured in units of watts and standard multiples thereof, that is:-

1,000 Watts = 1 kW

1,000 kW = 1 MW

### 3.3 Actual Metering Point ‡

Actual Metering Point means the physical location at which electricity is metered.

### 3.4 Apparent Energy ‡

Apparent Energy means the integral with respect to time of the Apparent Power.

### 3.5 Apparent Power ‡

Apparent Power means the product of voltage and current measured in units of volt-amperes and standard multiples thereof, that is:-

1,000 VA = 1 kVA

1,000 kVA = 1 MVA

### 3.6 CTN ‡

CTN means the Electricity Supply Industry (ESI) corporate telephone network.

### 3.7 CVA Customer †

CVA Customer means any customer, receiving electricity directly from the Transmission System, irrespective of from whom it is supplied.


**© Elexon Limited 2022**

### 3.8 De-Energised ‡

De-Energised means the temporary removal of the supply at a Defined Metering Point (e.g. the main circuit connections to the Public Distribution System Operator's network are still made) such that all or part of the Metering Equipment is considered to be temporarily "inactive" for the purposes of Settlement. e.g. unoccupied premises where the incoming switchgear has been opened or the cut-out fuse(s) removed.

### 3.9 Defined Metering Point ‡

Defined Metering Point means the physical location at which the overall accuracy requirements as stated in this Code of Practice are to be met. The Defined Metering Points are identified in Appendix A.

### 3.10 Demand Period ‡

Demand Period means the period over which Active Energy, Reactive Energy or Apparent Energy are integrated to produce stored energy values. For Settlement purposes, unless the context requires otherwise, each Demand Period shall be of 30 minutes duration, one of which shall finish at 24:00 hours.

### 3.11 Demand Values ‡

Demand Values means, expressed in kW, kvar or kVA, twice the value of kWh, kvarh or kVAh recorded during any Demand Period. The Demand Values are half hour demands and these are identified by the time of the end of the Demand Period.

### 3.12 Electricity *

"electricity" means Active Energy and Reactive Energy.

### 3.13 Export †

Export means, for the purposes of this Code of Practice, an electricity flow as indicated in Figure 1 of Appendix B.

### 3.14 Import †

Import means, for the purposes of this Code of Practice, an electricity flow as indicated in Figure 1 of Appendix B.

### 3.15 Interrogation Unit ‡

Interrogation Unit means a Hand Held Unit "HHU" (also known as Local Interrogation Unit LIU") or portable computer which can enter Metering Equipment parameters and extract information from the Metering Equipment and store this for later retrieval.

### 3.16 Maximum Demand †

Maximum Demand expressed in kW or kVA means twice the greatest number of kWh or kVAh recorded during any Demand Period.


**© Elexon Limited 2022**

### 3.17 Meter *

Meter means a device for measuring Active Energy and/or Reactive Energy.

### 3.18 Metering Equipment *

Metering Equipment means Meters, measurement transformers (voltage, current or combination units), metering protection equipment including alarms, circuitry, associated Communications Equipment and Outstation and wiring.

### 3.19 Meter Register ‡

Meter Register means a device, normally associated with a Meter, from which it is possible to obtain a reading of the amount of Active Energy, or the amount of Reactive Energy that has been supplied by a circuit.

### 3.20 Offshore Platform

Has the meaning given to that term in the Grid Code.

### 3.21 Offshore Power Park Module

Has the meaning given to that term in the Grid Code.

### [MHHS-MS]3.22 Outstation *

Outstation means equipment which receives and stores data from a Meter(s) for the purpose, inter-alia, of transfer of that metering data to the Central Data Collector Agent (CDCA) or Data Service~~Collector~~ as the case may be and which may perform some processing before such transfer and may be in one or more separate units or may be integral with the Meter.

### 3.23 Outstation System ‡

Outstation System means one or more Outstations linked to a single communication line. For clarification, where there is no physical communication line (i.e. SMS) the point of connection to the communication system shall be deemed as the communications line.

### 3.24 Password ‡

Password means a string of characters of length no less than six characters and no more than twelve characters, where each character is a case insensitive or sensitive alpha character (A to Z) or a digit (0 to 9) or the underscore character (_). Passwords must have a minimum of 2,000,000,000 combinations, for example six characters if composed of any alphanumeric characters or eight characters if composed only of hexadecimal characters (0 to F). The characters of a hexadecimal password must be in upper case.

### 3.25 PSTN ‡

PSTN means the public switched telephone network.


**© Elexon Limited 2022**

### 3.26 Rated Measuring Current ‡

Rated Measuring Current means the rated primary current of the current transformers in primary plant used for the purposes of measurement.

### 3.27 Reactive Energy *

Reactive Energy means the integral with respect to time of the Reactive Power and for the purpose of the Code, is comprised of Active Export Related Reactive Energy and Active Import Related Reactive Energy.

### 3.28 Reactive Power *

Reactive Power means the product of voltage and current and the sine of the phase angle between them measured in units of volt-amperes reactive and standard multiples thereof.

### 3.29 Registrant *

Registrant means in relation to a Metering System, the person for the time being registered in CMRS or (as the case may be) SMRS in respect of that Metering System pursuant to Section K of the Balancing and Settlement Code.

### [MHHS-MS]3.30 Settlement Instation ‡

Settlement Instation means a computer based system which collects or receives data on a routine basis from selected Outstation Systems by a Data Service~~Collector~~.

### 3.31 SVA Customer †

means a person to whom electrical power is provided, whether or not that person is the provider of that electrical power; and where that electrical power is measured by a SVA Metering System.

### 3.32 UTC *

UTC means Co-ordinated Universal Time which bears the same meaning as in the document Standard Frequency and Time Signal Emission, International Telecommunication Union - RTF.460(ISBN92-61-05311-4) (colloquially referred to as Rugby Time).


**© Elexon Limited 2022**

# 4. MEASUREMENT CRITERIA

The following measured quantities and Demand Values are for use with CVA Metering Systems.

## 4.1 Measured Quantities and Demand Values for Metering Systems Registered in CMRS

### 4.1.1 Measured Quantities

For each separate circuit the following energy measurements are required for Settlement purposes:-

(i) Import MWh*

(ii) Export MWh*

(iii) Import Mvarh*

(iv) Export Mvarh*

### 4.1.2 Demand Values

For each Demand Period for each circuit the following Demand Values shall be provided:-

(i) Import MW*

(ii) Export MW*

(iii) Import Mvar

(iv) Export Mvar

* Import and/or Export metering need only be installed where a Party requires this measurement to meet system or plant conditions.

Where Import and Export metering is installed gross Import and gross Export Active Energy shall be recorded separately for Settlements.

For multiple circuit connections between Parties the configuration of the Metering Equipment shall be agreed in advance with the Panel.


**© Elexon Limited 2022**

## 4.2 Measured Quantities and Demand Values for Metering Systems Registered in SMRS

SVA Metering Systems shall use units a factor of $10^3$ smaller than CVA i.e. kWh rather than MWh.

4.2.1 Measured Quantities

For each separate circuit the following energy measurements are required for Settlement purposes:-

(i) Import kWh *

(ii) Export kWh *

(iii) Active Import related Import kvarh

(iv) Active Import related Export kvarh

(v) Active Export related Import kvarh

(vi) Active Export related Export kvarh

4.2.2 Demand Values

For each Demand Period for each circuit the following Demand Values shall be provided:-

(i) Import kW *

(ii) Export kW *

(iii) Active Import related Import kvar

(iv) Active Import related Export kvar

(v) Active Export related Import kvar

(vi) Active Export related Export kvar

* Import or Export metering need only be installed where a Party requires this measurement to meet system or plant conditions. However both Import and Export reactive measurements shall be provided for each Active measurement.


**© Elexon Limited 2022**

## 4.3 Accuracy Requirements

### 4.3.1 Overall Accuracy

The overall accuracy of the energy measurements at, or referred to, the Defined Metering Point shall at all times be within the limits of error as shown:-

(i) Active Energy

| CONDITION | LIMIT OF ERRORS AT STATED SYSTEM POWER FACTOR | |
|---|---|---|
| Current expressed as a percentage of Rated Measuring Current * | Power Factor | Limits of Error |
| 100% to 20% inclusive | 1 | ± 1.5% |
| Below 20% to 5% | 1 | ± 2.5% |
| 100% to 20% inclusive | 0.5 lag and 0.8 lead | ± 2.5% |

* for whole current metering percentage relates to $I_{max}$.

(ii) Reactive Energy

| CONDITION | LIMIT OF ERRORS AT STATED SYSTEM POWER FACTOR | |
|---|---|---|
| Current expressed as a percentage of Rated Measuring Current * | Power Factor | Limits of Error |
| 100% to 20% inclusive | Zero | ± 4.0% |
| 100% to 20% inclusive | 0.866 lag and 0.866 lead | ± 5.0% |

* for whole current metering percentage relates to Imax.

These limits of error for both (i) and (ii) above shall apply at the Reference Conditions defined in the appropriate Meter specification.

Evidence to substantiate that these overall accuracy requirements are met shall be available for inspection to either the Panel or the Technical Assurance Agent.


**© Elexon Limited 2022**

4.3.2 Compensation for Measurement Transformer Error

To achieve the overall accuracy requirements it may be necessary to compensate Meters for the errors of the measurement transformers and the associated leads to the Meters. Values of the compensation shall be recorded and evidence to justify the compensation criteria, including wherever possible test certificates[3], shall be available for inspection by either the Panel or the Technical Assurance Agent.

4.3.3 Compensation for Power Transformer and Line Losses

Subject to Appendix A paragraph 1 and paragraph 5(ii), where the Actual Metering Point and the Defined Metering Point do not coincide a Metering Dispensation shall be applied for and, where necessary, accuracy compensation for power transformer and/or line losses shall be provided to meet the overall accuracy at the Defined Metering Point. Where Appendix A paragraph 1 applies a Metering Dispensation shall not be required provided that there is only a length of cable or line between the AMP and the DMP (i.e. no power transformer). Where Appendix A paragraph 5(ii) applies a Metering Dispensation shall not be required and accuracy compensation for power transformer and/or line losses (for the purpose of Section K1.1.6 of the Code) shall be provided or applied to meet the overall accuracy required at the Defined Metering Point.

The accuracy compensation may be achieved in the Metering Equipment and in this event the provided or applied values shall be validated in accordance with BSCP32 'Metering Dispensations' and recorded. Supporting evidence to justify the accuracy compensation criteria shall be available for inspection by either the Panel or the Technical Assurance Agent.

Alternatively, the accuracy compensation may be provided or applied in the software of the relevant data aggregation system used for Settlement purposes. In this event the factors shall be validated in accordance with BSCP32 'Metering Dispensations', passed to the appropriate agency and evidence to justify the accuracy compensation criteria shall be made available for inspection by either the Panel or the Technical Assurance Agent.

## 5. METERING EQUIPMENT CRITERIA

Although for clarity this Code of Practice identifies separate items of equipment, nothing in it prevents such items being combined to perform the same task provided the requirements of this Code of Practice are met.

Metering Equipment other than outdoor measurement transformers, shall be accommodated in a clean and dry environment.

For each circuit, other than one which is permanently disconnected, the voltage supply to any Meters, Displays and Outstations shall be connected such that it is normally energised to facilitate reading of the Meter Register(s) and Local and Remote Interrogation of the Outstation. (see Appendix E).

[3] Regardless of class accuracy of measurement transformers if compensation has been applied to the Meters all calibration certificates shall be retained


**© Elexon Limited 2022**

Where an Outstation is storing data for more than one circuit and the Outstation power supply is from these circuits then a voltage selection relay scheme using each circuit involved shall be provided.

## 5.1 Measurement Transformers

All measurement transformers shall be of a wound construction.

For each circuit where current transformers (CT) and/or voltage transformers (VT) are used, they shall meet the requirements set out in clauses 5.1.1 and 5.1.2.

Where a measurement transformer has been tested and stamped to an iteration of the applicable BS EN/IEC standard and that differs from the version referenced in this Code of Practice (i.e. BS EN/IEC 61869-2; BS EN/IEC 61869-3; BS EN/IEC 61869-4) measurement transformers may still be used providing the requirements in clause 4.3.1 are met and if one of the following conditions is met:

- All measurement transformers purchased post implementation[4] of the latest applicable BS EN/IEC standard should be manufactured in accordance with that version of the BS EN/IEC standard that has superseded the version of the BS EN/IEC standard referenced in this Code of Practice (i.e. BS EN/IEC 61869-2; BS EN/IEC 61869-3; BS EN/IEC 61869-4). **This is only for measurement transformers where the same accuracy class is available and limits of error and phase displacement have not changed from the BS EN/IEC standard referenced in this Code of Practice (i.e. BS EN/IEC 61869-2; BS EN/IEC 61869-3; BS EN/IEC 61869-4)**; **or**
- All measurement transformers purchased prior to the implementation[5] of the latest version of the applicable BS EN/IEC standard referenced in this Code of Practice (i.e. BS EN/IEC 61869-2; BS EN/IEC 61869-3; BS EN/IEC 61869-4) should be in accordance with the previous version of the applicable BS EN/IEC standard that the latest version has superseded. **This is only for stocks of measurement transformers held to be used up and does not allow measurement transformers compliant with an older version of a BS EN/IEC standard where the same accuracy class is not available or limits of error and phase displacement have changed to be used.**

Additionally, where a combined unit measurement transformer (VT & CT) is provided the 'Tests for Accuracy' as covered in of BS EN/IEC 61869-4 covering mutual influence effects shall be met.

### 5.1.1 Current Transformers

Where required, one set of current transformers to BS EN/IEC 61869-2 with a minimum standard of accuracy to class 0.5S, shall be provided per circuit. Preferably, the current transformers shall be dedicated for Settlement purposes, but the CTs may be used for other purposes provided the overall accuracy requirements in clause 4.3.1 are met and

[4] This condition is in effect until this Code of Practice has been updated to reference the latest versions of the applicable BS EN/IEC standard.
[5] This condition is in effect from when this Code of Practice has been updated to reference the latest versions of the applicable BS EN/IEC standard.


**© Elexon Limited 2022**

evidence of the value of the additional burden is available for inspection by the Panel or the Technical Assurance Agent.

The additional burden shall not be modified without prior notification to the Panel , and evidence of the value of the modified additional burden shall be available for inspection by either the Panel or the Technical Assurance Agent.

CT test certificates showing errors at the overall working burden or at burdens which enable the working burden errors to be calculated shall be available for inspection by the either the Panel or the Technical Assurance Agent. Where CT test certificates are not available and the CTs can be verified as class 0.5S or better and are installed on an LV installation, the extreme errors for the accuracy class shall be assumed.

The total burden on each current transformer shall not exceed the rated burden of such CT.

5.1.2 Voltage Transformers

Where required a voltage transformer to BS EN/IEC 61869-3 with a minimum standard of accuracy to class 1 shall be provided for the metering of a circuit. The voltage transformer may be used for other purposes provided the overall accuracy requirements in clause 4.3.1 are met and evidence of the value of the additional burden is available for inspection by either the Panel or the Technical Assurance Agent.

The additional burden shall not be modified without prior notification to the Panel , and evidence of the value of the modified additional burden shall be available for inspection by either the Panel or the Technical Assurance Agent.

A VT test certificate(s) showing errors at the overall working burden(s) or at burdens which enable the working burden errors to be calculated shall be available for inspection by either the Panel or the Technical Assurance Agent.

The total burden on each secondary winding of a VT shall not exceed the rated burden of such secondary winding.

The VT supplies shall be fused as close as practicable to the VT, with a set of isolating links, suitably identified provided locally to the Metering Equipment.

5.1.3 Measurement Transformers Installed on Existing Circuits

Where circuits, other than those newly installed, are to be metered to this Code of Practice and where the installed measurement transformers do not comply with the Class accuracies specified in clauses 5.1.1 & 5.1.2, then such measurement transformers may be used providing the following requirements and those in clause 4.3.1 are met.

(i) Where subsequently a significant alteration to the primary plant (e.g. a switchgear change) is carried out, new measurement transformers as detailed in clauses 5.1.1 and 5.1.2, shall be provided.

(ii) In all other respects the requirements of clauses 5.1.1 and 5.1.2 are met, except that where test certificates are not available other documentary evidence as referred to in clause 4.2.2 shall be available.


**© Elexon Limited 2022**

## 5.2 Fusing and Testing Facilities

Where current and/or voltage transformers are used, testing facilities shall be provided close by the Meters of each circuit, which enables such Meters to be routinely tested and /or changed safely with the circuit energised. (see Appendix C).

Separate fusing shall be provided locally for:-

(i) the Meter

(ii) any other Settlement Metering Equipment burden

(iii) any other Equipment burden e.g. non-Pool Meters, protection, etc.

Local fusing shall discriminate with the source fusing.

A typical arrangement is illustrated in Appendix C.

Where Current Transformers are used on low voltage installations, the voltage supply to the Metering Equipment shall be fused as close as practicable to the point of that supply with a set of isolating links provided locally, suitably identified, to the Metering Equipment. If that point of supply is close to the Metering Equipment, then the isolating links may be omitted.

## 5.3 Meters

The Meters may be either static or induction disc types.

For each circuit, Active Energy Meters shall be supplied which shall meet the requirements of either BS EN/IEC 62053-21 class 1 or BS EN 50470-3 class B or BS EN/IEC 62053-11 and BS 7856 class 1.

Active Energy Meters provided for the metering of supplies to customers shall be in accordance with Schedule 7 of the Electricity Act 1989.

For each circuit, Reactive Energy Meter(s) shall be supplied which shall meet the requirements of BS EN/IEC 62053-23 class 3.

Active Energy Meters shall be configured such that the number of measuring elements is equal to or one less than the number of primary system conductors. These include the neutral conductor, and/or the earth conductor where system configurations enable the flow of zero sequence energy.

All Meters supplied via measurement transformers shall be set to the actual primary and secondary ratings of the measurement transformers and the ratios displayed as follows:-

(i) For Meters separate from the display and/or Outstation the ratios shall be recorded on the nameplate of the Meter.

(ii) For static Meters combined with the display and/or the Outstation, the ratios shall be displayed and downloaded during the interrogation process. In addition, the compensation factor that has been applied for measurement transformer errors


**© Elexon Limited 2022**

and/or system losses, where this is a constant factor applied at security level 3 shall be similarly displayed and downloaded.

All Meters shall include a non-volatile Meter Register of cumulative energy for each measured quantity (see 4.1.1). The Meter Register(s) shall not roll-over more than once within the normal Meter reading cycle.

Meters which provide data to separate Outstations shall for this purpose provide an output per measured quantity (see 4.1.1).

For Meters using electronic displays due account shall be taken of the obligations to obtain Meter Readings, even when the circuit is de-energised.

All Meters shall be labelled or otherwise be readily identifiable with respect to their associated circuit(s), and in accordance with Appendix B.

## 5.4 Displays and Facilities for Registrant or Supplier Information

5.4.1 Displays

a) Mandatory Displays

The Metering Equipment shall display the following primary information (not necessarily simultaneously):-

(i) measured quantities as per clause 4.1.1

(ii) current time ("UTC") and date;

(iii) the CT and/or VT ratios that the Meter has been programmed to, where appropriate (see clause 5.3); and

(iv) the compensation factor that has been applied for measurement transformer errors and/or system losses, where this is a constant factor applied at security level 3 (i.e. where the Meter is combined with the display and/or Outstation).

b) Display Capabilities

The Metering Equipment shall be capable of enabling the display of the following information, as specified by the Registrant:-

(i) Maximum Demand ("MD") for kW per programmable charging period, i.e. monthly or statistical review period;

(ii) Maximum Demand ("MD") for kVA per programmable charging period, i.e. monthly or statistical review period;

(iii) twice the kWh advance since the commencement of a current Demand Period, (i.e. "kW rising demand");

(iv) twice the kVAh advance since the commencement of a current Demand Period, (i.e. "kVA rising demand");


**© Elexon Limited 2022**

(v) cumulative MD;

(vi) number of MD resets;

(vii) multi-rate display sequence as specified by the Registrant, with a minimum of 8 rates selectable over the calendar year; and

(viii) indication of reverse running for Active Energy, where appropriate.

MD shall be resettable at midnight of last day of charging period. Also resettable for part chargeable period demands. If a manual reset button is used then this shall be sealable.

5.4.2 Facilities

The Metering Equipment shall be capable of providing a minimum of three pulse outputs for use locally by the Customer or Registrant, configured to their requirements taking account of the measured quantities (see clause 4.1.1):-

(i) impulsing for Import kWh, Export kWh, Import kvarh, Export kvarh and kVAh - all to be voltage free contacts with a pulse rate at full load of between 0.1 and 2 pulses per second with a nominal duration of 80mS per pulse; and

(ii) a 30 minute reset pulse, within a tolerance of +/- 0.1.% of the Demand Period, from voltage free contacts with a minimum duration of 0.5 seconds and a maximum duration of 10 seconds.

**[MHHS-MS]5.5 Outstation**

An Outstation System shall be provided which transfers data to and receives data from a Settlement Instation.

The Outstation data shall be to a format and protocol approved by the Panel in accordance with BSCP601 'Metering Protocol Approval and Compliance Testing'.

The Outstation shall facilitate the metering data to be read by instations other than the Settlement Instation provided the requirements of clause 7 of this Code of Practice are satisfied.

For the purpose of transferring stored metering data from the Outstation to the Settlement Instation, a unique Outstation identification code shall be provided.

Facilities shall be provided to select a relevant demand period from one of the following values:-

30, 20, 15, 10 and 5 minutes with in each case one demand period ending on the hour.

Normally, metering data will be collected by the Settlement Instation by a daily interrogation, but repeat collections of metering data shall be possible throughout the Outstation data storage period.


**© Elexon Limited 2022**

Where metering data is transferred to the Settlement instation automatically, the Outstation shall be capable of providing this data on a daily basis as a minimum. Time synchronisation of the Outstation shall be performed by the ~~Half Hourly Data Collector~~Advanced Data Service communicating directly with the Outstation in accordance with BSCP 7~~5~~02 '~~Half Hourly Data Collection for SVA~~ MHHS Advanced Metering Systems Registered in SMRS'.

If not integral with the Meter, a separately fused supply shall be provided for each Outstation.

Where a separate modem associated with the Outstation System is used, then it shall be provided with a separately fused supply. Alternatively, line or battery powered modem types may be used.

5.5.1 Data Storage

Data storage facilities shall be provided as follows:-

(i) Each Demand Value shall be identifiable to its respective date and time;

(ii) a storage capacity of 48 periods per day for a minimum of 90 days for all Demand Values as defined in clause 4.1.2. The stored values shall be integer multiples of kW and kvar;

(iii) the resolution of the Active Energy transferred into the demand registers shall be within ±0.1% (at full load) of the amount of Active Energy measured by the associated Meter;

(iv) the value of energy measured in a Demand Period but not stored in that Demand Period shall be carried forward to the next Demand Period;

(v) where a separate Outstation is used, cumulative register values shall be provided in the Outstation which shall be set to match and increment with the Meter Registers;

(vi) in the event of an Outstation supply failure, the Outstation shall protect all data stored up to the time of the failure, and maintain the time accuracy in accordance with clause 5.5.2;

(vii) partial Demand Values in which an Outstation supply failure and/or restoration occurs and zero values associated with an Outstation supply failure, shall be marked so that the Settlement Instation can identify them;

(viii) to cater for continuous supply failures, the clock, calendar and all data shall be supported for a period of 20 days without an external supply connected;

(ix) any "read" operation shall not delete or alter any stored metered data; and

(x) an Outstation shall provide all the metered data stored from the commencement of any specified date upon request by the Settlement Instation.


**© Elexon Limited 2022**

5.5.2 Time Keeping

(i) The Outstation time shall be set to Co-ordinated Universal Time (UTC). No switching between UTC and British Summer Time (BST) shall occur for settlement data storage requirements.

(ii) Time synchronisation of the Outstation may be performed remotely by the Settlement Instation as part of the normal interrogation process or locally by an Interrogation Unit.

(iii) When time synchronisation occurs the relevant period(s) shall be marked with an alarm indication, as outlined in clause 5.5.3.

(iv) The overall limits of error for the time keeping allowing for a failure to communicate with the Outstation for a period of 20 days shall be:-

a) the completion of each Demand Period shall be at a time which is within ± 20 seconds of UTC; and

b) the duration of each Demand Period shall be within ± 0.1%, except where time synchronisation has occurred in a Demand Period.

5.5.3 Monitoring Facilities

Monitoring facilities shall be provided for each of the following conditions and shall be reported, as separate alarm indications, tagged to the relevant Demand Period(s), via remote communications and the local Interrogation Unit:-

(i) phase failure of any one or combination of phases;

(ii) Metering Equipment resets caused by other than a supply failure (where fitted);

(iii) battery monitoring (where battery fitted);

(iv) interrogation port access which changes time and/or date;

(v) where different from (iv), Demand Period(s) which have been truncated or extended by a time synchronisation;

(vi) interrogation port access which changes data other than time and/or date; and

(vii) reverse running (if fitted).

In addition to (ii), detected errors in Metering Equipment functionality should be recorded as an event alarm with date and time.

Any alarm indications shall not be cancelled or deleted by the interrogation process and shall be retained with the data until overwritten. The alarm shall reset automatically when the abnormal condition has been cleared.


**© Elexon Limited 2022**

## 5.6 Communications

Outstation(s) shall provide both local and remote interrogation facilities, from separate ports.

To prevent unauthorised access to the data in the Metering Equipment a security scheme, as defined below and in Appendix D, shall be incorporated for both local and remote access. Separate security levels shall be provided for the following activities:-

(i) Level 1 - Password for:-

Read only of the following metering data, which shall be transferable on request during the interrogation process:-

a) Outstation ID;

b) Demand Values as defined in clause 4.1.2;

c) cumulative measured quantities as defined in clause 4.1.1;

d) Maximum Demand (MD) for kW or kVA per programmable charging period i.e. monthly, statistical review period;

e) multi-rate cumulative Active Energy as specified by the Registrant;

f) the measurement transformer ratios, where appropriate (see clause 5.3);

g) the measurement transformer error correction factor and/or system loss factor, where this is a constant factor applied to the entire dynamic range of the Meter and the Meter is combined with the display and/or Outstation;

h) alarm indications; and

i) Outstation time and date.

(ii) Level 2 - Password for:-

a) corrections to the time and/or date; and

b) resetting of the MD.

(iii) Level 3 - Password for:-

Programming of:-

a) the Displays and Facilities as defined in clause 5.4;

b) the measurement transformer ratios, as appropriate (see clause 5.3);

c) the measurement transformer error correction and/or system loss factor where this is a constant factor applied to the entire dynamic range of the Meter and the Meter is combined with the display and/or Outstation;


**© Elexon Limited 2022**

d) the passwords for levels 1, 2 and 3; and

e) programming of the schedule for automated transfer of Level 1 metering data.

In addition, it shall be possible to read additional information within the Metering Equipment to enable the programmed information to be confirmed.

(iv) Level 4 - Password or- removal of Metering Equipment cover(s) necessitating the breaking of a seal for:-

a) calibration of the Metering Equipment;

b) setting the measurement transformer ratios, where appropriate (see clause 5.3);

c) setting the measurement transformer error correction and/or system loss factors where this is other than a single factor; and

d) programming the level 3 password and the level 4 password, if appropriate.

In addition to the functions specified for each level it shall be feasible to undertake the functions at the preceding level(s). e.g. at level 3 it shall also be possible to carry out the functions specified at levels 1 and 2. This need not apply at level 4 when access is obtained via removing the cover.

Different Passwords shall be utilised for each level, which shall only be circulated in accordance with the relevant BSC Procedure.

5.6.1 Local Interrogation

(i) An interrogation port shall be provided for each Outstation which preferably shall be an opto port to BS EN/IEC 62056-21, and with a serial protocol such as BS EN/IEC 62056-21.

5.6.2 Remote Interrogation

Remote interrogation facilities shall be provided with error checking of the communications between the Outstation System and the Settlement instation.

It shall not be possible to disconnect the remote communications connection to/from the Outstation without the breaking of an appropriate seal (see clause 5.7).

Interrogation of an Outstation shall be possible using one of the following media:

(i) Switched telephone networks e.g. PSTN or CTN;

(ii) Public data networks e.g. PSN;

(iii) Radio data networks e.g. GSM, Paknet or any equivalent;

(iv) Customer own network;


**© Elexon Limited 2022**

(v) Mains signalling / power line carrier;

(vi) Low power radio;

(vii) Satellite; or

(viii) Cable TV.

In addition any further media may be used as approved by the Panel.

The actual media employed shall be in accordance with the requirements of the CDCA for CVA Metering Systems and the Supplier for SVA Metering Systems.

The data shall be to a format and protocol approved by the Panel in accordance with BSCP601 'Metering Protocol Approval and Compliance Testing'.

### 5.7 Appropriate Seals

All SVA Metering Equipment shall be sealed in accordance with the Retail Energy Code Scheme Meter Operation Code of Practice Agreement[6].

All CVA Metering Equipment shall be sealed using Settlement Seals and in accordance with BSCP06.

## 6. ASSOCIATED FACILITIES

### 6.1 Interrogation Unit

The operator may interrogate the Metering Equipment using an Interrogation Unit (IU). The IU may be used for programming, commissioning, maintenance/fault finding and when necessary the retrieval of stored metering data. The data retrieved by the IU shall be compatible with the Settlement Instation.

The IU shall have a built-in security system, such as a password, so that the IU becomes inoperative and non-interrogatable if it is lost, stolen, etc. The password can be applied at power-on of the device and/or on entry to the IU software application.

### 6.2 Additional Features

Additional features may be incorporated within or associated with the Metering Equipment provided but these must not interfere with or endanger the operation of the Settlement process.

[6] The Meter Operation Code of Practice Agreement is an agreement between Public Distribution System Operators and SVA Meter Operator Agents in accordance with the Retail Energy Code


**© Elexon Limited 2022**

## 7. ACCESS TO DATA

Access to metering data shall be in accordance with the provisions of the Code and the BSC Procedures referred to therein. Such access must not interfere with or endanger the security of the data or the collection process for Settlement purposes.

Access to stored metering data in Outstations shall also be the right of the Registrant and any party who has the permission of the Registrant.


**© Elexon Limited 2022**

## APPENDIX A DEFINED METERING POINTS

For transfers of electricity between the following parties the Defined Metering Point (DMP) shall be at one of the following locations:-

1. For transfers between the Transmission System and a Distribution System operated by a Licensed Distribution System Operator where no other Party(s) are connected to the busbar, the DMP shall be at the point(s) of connection to the Transmission System. A Party shall install Metering Equipment at a point on the circuit (e.g. the common incoming circuit for double busbar connections) within 100 metres of the DMP. Such point shall be the Actual Metering Point for the purposes of this Code of Practice.

2. For transfers between the Transmission System and a Distribution System operated by a Licensed Distribution System Operator where other Party(s) are connected to the busbar, the DMP shall be at the circuit connections to that Distribution System operated by a Licensed Distribution System Operator.

3. For transfers between the Transmission System and more than one Distribution System operated by a Licensed Distribution System Operator connected to the same busbar, the DMP shall be at the circuit connections of each Distribution System operated by a Licensed Distribution System Operator to such busbar.

4. For transfers between Distribution Systems operated by Licensed Distribution System Operators, not including a connection to the Transmission System, the DMP shall be at the point(s) of connection of the two Distribution Systems operated by Licensed Distribution System Operators.

5. For transfers between the Transmission System and:-

   (i) Generating Plant, the DMP shall be at the point(s) of connection of the Generating Plant to the Transmission System.

   (ii) An Offshore Power Park Module(s) comprising a single BM Unit, the DMP shall be at the point(s) of connection of the Offshore Power Park Module to the Transmission System. A Party may install Metering Equipment at either:

   - the DMP; or
   - a point or points on the Offshore Platform, other than the DMP. Such point or points shall be the Actual Metering Point for the purposes of this Code of Practice.

6. For transfers between a Distribution System operated by a Licensed Distribution System Operator and Generating Plant, the DMP shall be at the point(s) of connection of the generating station to the Distribution System operated by a Licensed Distribution System Operator.

7. For transfers between the Distribution System operated by a Licensed Distribution System Operator and a Customer, the DMP shall be at the point(s) of connection to the Distribution System operated by a Licensed Distribution System Operator.


**© Elexon Limited 2022**

8. For transfers between the Transmission System and a Customer, the DMP shall be at the point(s) of connection to the Transmission System.

9. For transfers between the Transmission System, or a Distribution System operated by a Licensed Distribution System Operator, and an External System the DMP shall be at the point(s) of connection of that External System to the Transmission System or to the Distribution System operated by a Licensed Distribution System Operator.

10. For transfers between an Offshore Transmission System (or Offshore Transmission System User Assets) and a Distribution System operated by a Licensed Distribution System Operator, the DMP shall be at the point(s) of connection to the Distribution System operated by a Licensed Distribution System Operator.


**© Elexon Limited 2022**

## APPENDIX B LABELLING OF METERS FOR IMPORT AND EXPORT

A standard method of labelling Meters, test blocks, etc is necessary and based on the definitions for Import and Export the required labelling shall be as follows.

1 ACTIVE ENERGY

Meters or Meter Registers shall be labelled "Import" or "Export" according to Figure 1.

2 REACTIVE ENERGY

Within the context of this code the relationship between Active Energy and Reactive Energy can best be established by means of the power factor. The following table gives the relationship:-

| Flow of Active Energy | Power Factor | Flow of Reactive Energy |
|---|---|---|
| Import | Lagging | Import |
| Import | Leading | Export |
| Import | Unity | Zero |
| Export | Lagging | Export |
| Export | Leading | Import |
| Export | Unity | Zero |

Meters or Meter Registers for registering Import Reactive Energy should be labelled "Import" and those for registering Export Reactive Energy should be labelled "Export".

For Metering Equipment Registered in SMRS Meters or Registers shall be labelled in accordance with Figure 1 but with additional information for reactive Meters or Registers which identifies which Active Meter or Register it is associated with.


**© Elexon Limited 2022**

**FIGURE 1**

IMPORT AND EXPORT ACIV ENERGY FLOWS CONVENTION

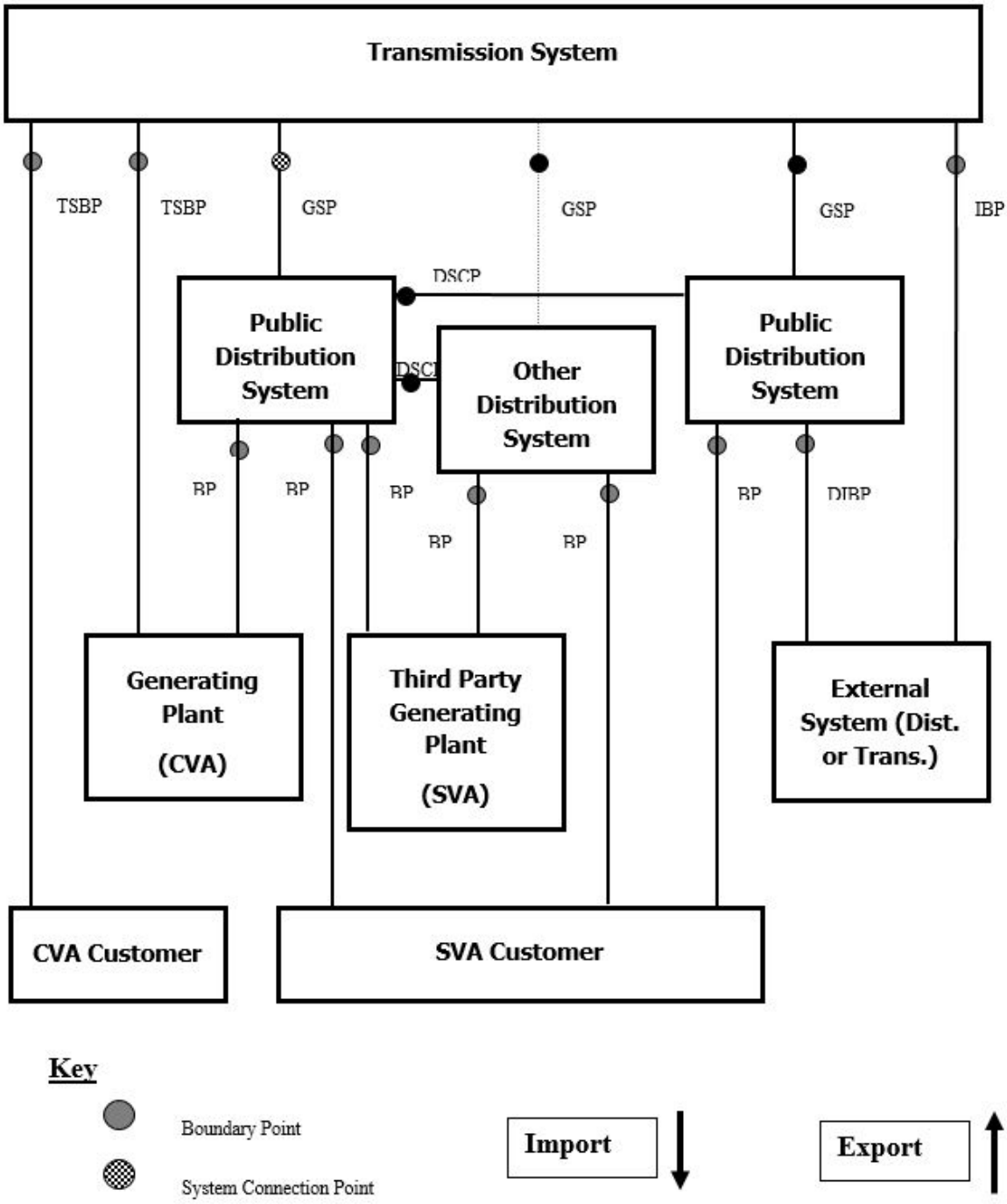


Import / Export Energy Flow Convention for the labelling of Meters

Import metering measures energy flows away from the Transmission System.
Export metering measures energy flows towards the Transmission System.
Energy flows between Distribution Systems is by bilateral agreement.


**© Elexon Limited 2022**

Key to abbreviations used in Import / Export Diagram

| | |
|---|---|
| O | Metering Point |
| BP | Boundary Point |
| DIBP | Distribution Interconnector Boundary Point |
| DSCP | Distribution System Connection Point |
| GSP | Grid Supply Point |
| IBP | Interconnector Boundary Point |
| SCP | System Connection Point |
| TSBP | Transmission System Boundary Point |


**© Elexon Limited 2022**

# APPENDIX C TYPICAL TESTING FACILITIES AND FUSING ARRANGEMENTS

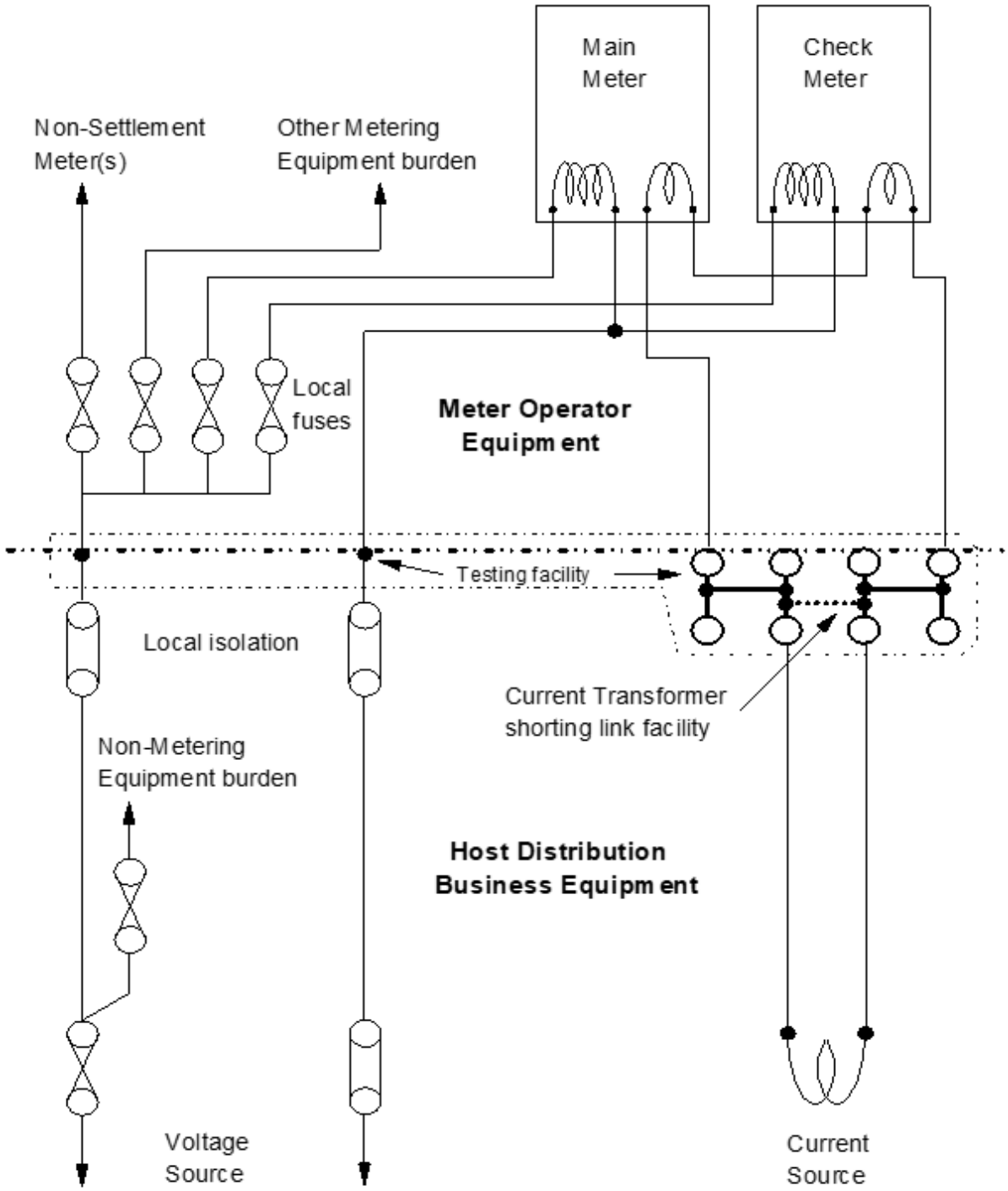



© Elexon Limited 2022

## APPENDIX D PASSWORDS

The Passwords specified in clause 5.6 shall be subject to the following additional requirements:-

**1.** The communications protocol employed shall ensure that the Password offered determines the level of access to the data within the Metering Equipment.

**2.** A counter logging the number of illegal attempts (i.e. Password comparison failures) to access Metering Equipment via the local and remote ports shall be incorporated into the log-on process. This counter shall reset to zero at every hour change (i.e. 0100, 0200, etc.).

**3.** If the counter reaches 7, then access is prohibited at all levels until the counter resets at the next hour change.


**© Elexon Limited 2022**

## APPENDIX E OPTIONS FOR ENSURING METERS AND DISPLAYS CAN BE READ AND REMOTELY INTERROGATED

This Appendix sets out the options for complying with the requirements set out in clause 5 for certain types of supply where the voltage supply to the Metering Equipment would not normally be maintained for significant periods. e.g. those used for standby and those where the customer's restricted period load is controlled by the main incoming switchgear.

1. Connection of Metering Equipment to the Live Side of the Supply

   For new supplies the most practical solution would be to arrange for the Metering Equipment to be connected to the incoming side of the main switchgear so that it is normally energised even when the switchgear is open.

2. Install Separate Meters and Displays/Outstations

   Installation of separate Meters and Displays/Outstations would enable the latter to be connected to a normally energised supply. This would facilitate Local and Remote Interrogation and reading on a routine basis. The Meters would need to be provided with a permanent Meter Register to meet the requirements of clause 5.3.

3. Combined Meters, Displays and Outstations with Separate Auxiliary Supply Facilities

   Integrated products could be utilised which have separate input terminals to energise the data storage and display functions which could be connected to a normally energised supply, whilst the voltage supply to the Meter is from the relevant circuit.

4. Combined Meters, Displays and Outstations Supplied via a Voltage Relay Selection Scheme

   With this option the integrated equipment would be connected to an appropriate single phase voltage supply via a voltage relay selection scheme such that whilst this circuit was de-energised it would receive it's voltage supply only, from the adjacent circuit. However, when this circuit was energised it would be fed with both voltage and current from the measured circuit. This arrangement is shown in Figure 2 overleaf and is only suitable for use with CT operated Metering Systems.


**© Elexon Limited 2022**

## APPENDIX E (cont'd)

FIGURE 2 SCHEMATIC DIAGRAM SHOWING A TYPICAL VOLTAGE SELECTION RELAY SCHEME ON HV OR LV, NORMALLY DE-ENERGISED SUPPLIES, TO ENABLE METER READING (CT OPERATED METERING SYSTEMS ONLY).

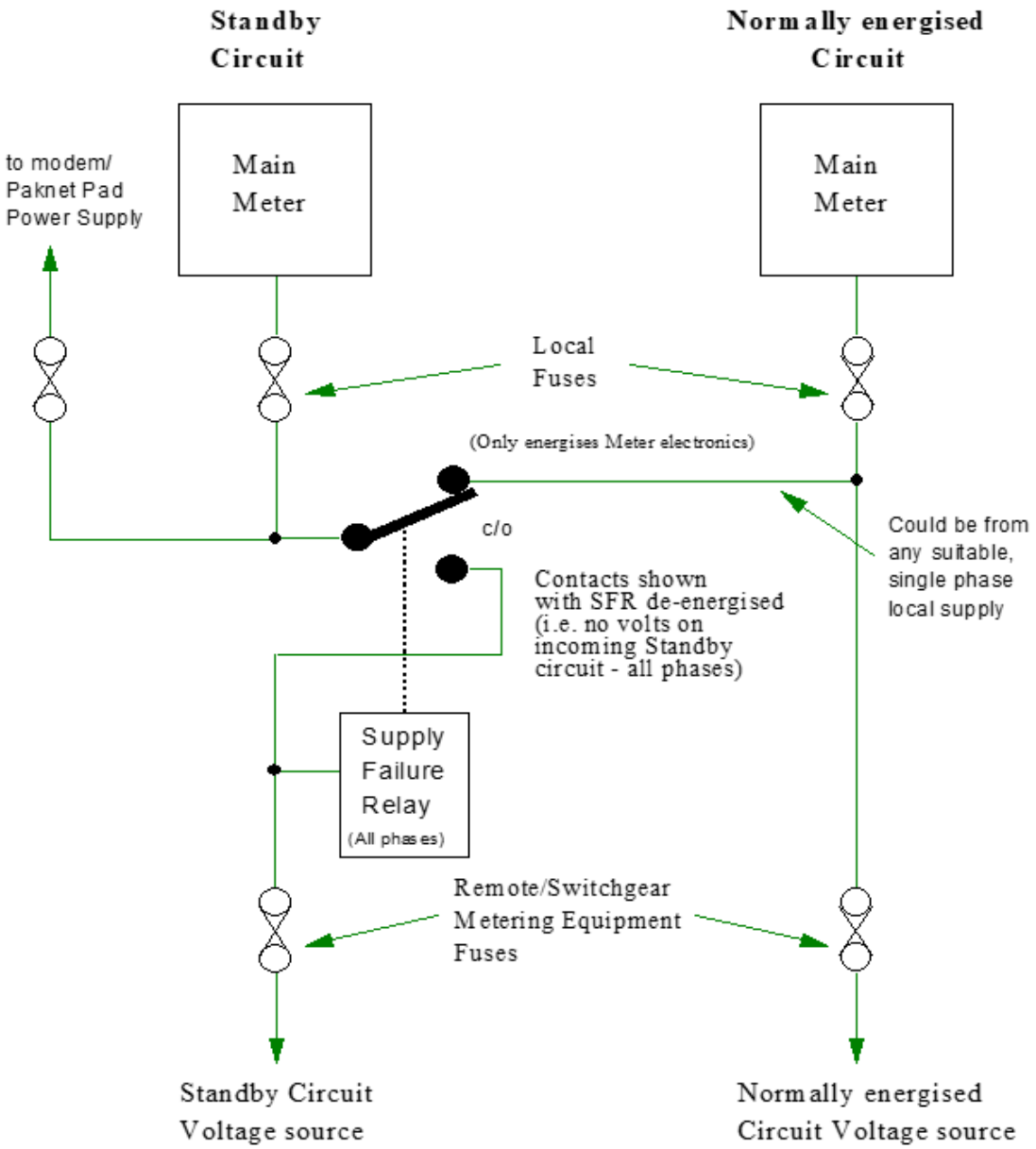



**© Elexon Limited 2022**